Filling valves

536

Filling valve for heating systems or as a shut-off valve for tap water.

Max pressure: 1.0 MPa
Max working temp: 90 °C

Design

Valve body made in DZR-brass, EN 12165 CW602N, with straight flow. The valve has an integrated shut-off and check valve, which also ensures opening under low pressure differentials.

Backflow protection type EB complying with EN1717. Pipe connection 15 mm with compression fittings, or G½ male thread when the nut is removed. The inlet side is also designed for LK Armatur's system with o-ring seals.

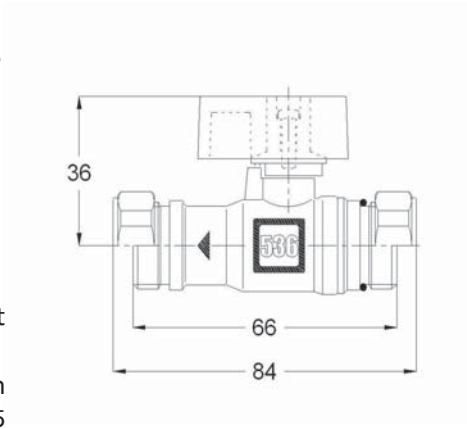

Fitting / Installation

The arrow on the valve housing indicates the direction of the flow.

Pipe connector 15 mm with compression fittings, or G½ male thread when the nut is removed. The thread has to be sealed in the usual manner.

The inlet side is also designed for LK Armatur's system with o-ring seals. When connecting to this system, tighten first by hand until stop, then another 0.5-1.5 turns with an appropriate tool into right position.

It is easier to fit the compression fitting if a lubricant is applied to the thread and bevel. Tighten first by hand and then with a box spanner. Number of turns to be tightened with a spanner: See the table on page 21. Soft pipes are to be fitted with a support sleeve.

Operation and maintenance

The filling valve requires no maintenance.
The installation should be checked regularly.

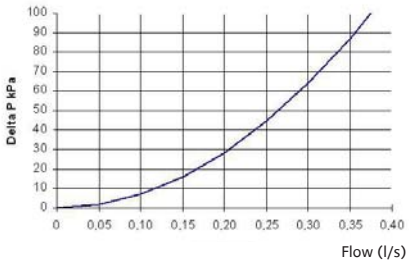

Article	Dimension	Art. no	Pack qty
536-15/G15	15 mm/G½ male	090015	1
536-15/15	15 mm/15 mm	090016	1
536-G15/G15	G½ male/G½ male	090017	1